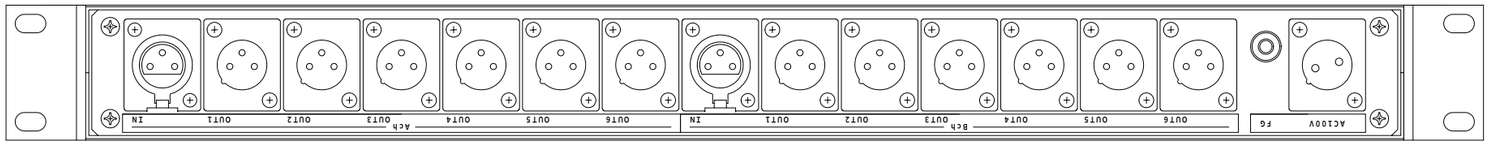

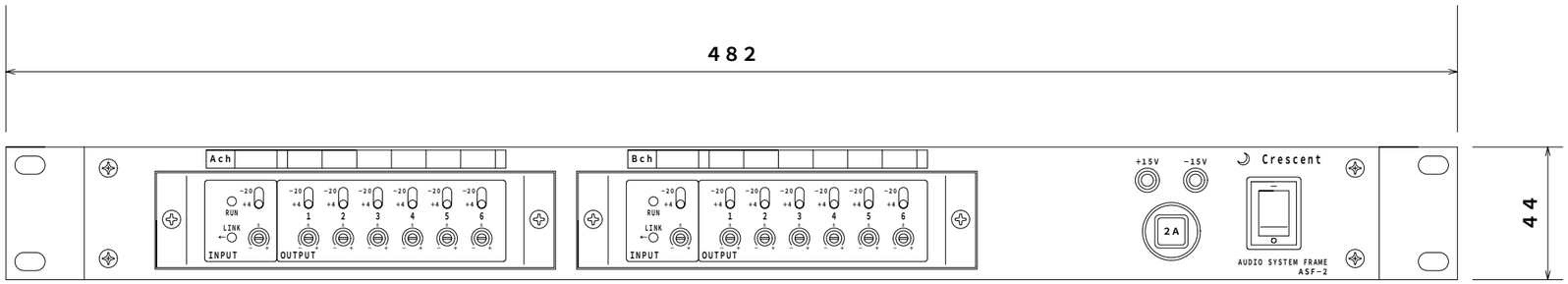

ADA UNIT 2式 実装

Crescent Co.,Ltd.	Scale 1/2	Designed by	Drawn by K.Y '07 / 03 / 26	TITLE AUDIO SYSTEM FRAME ASF-2	SUB TITLE 外観図	Drawing No. ; Whole ;

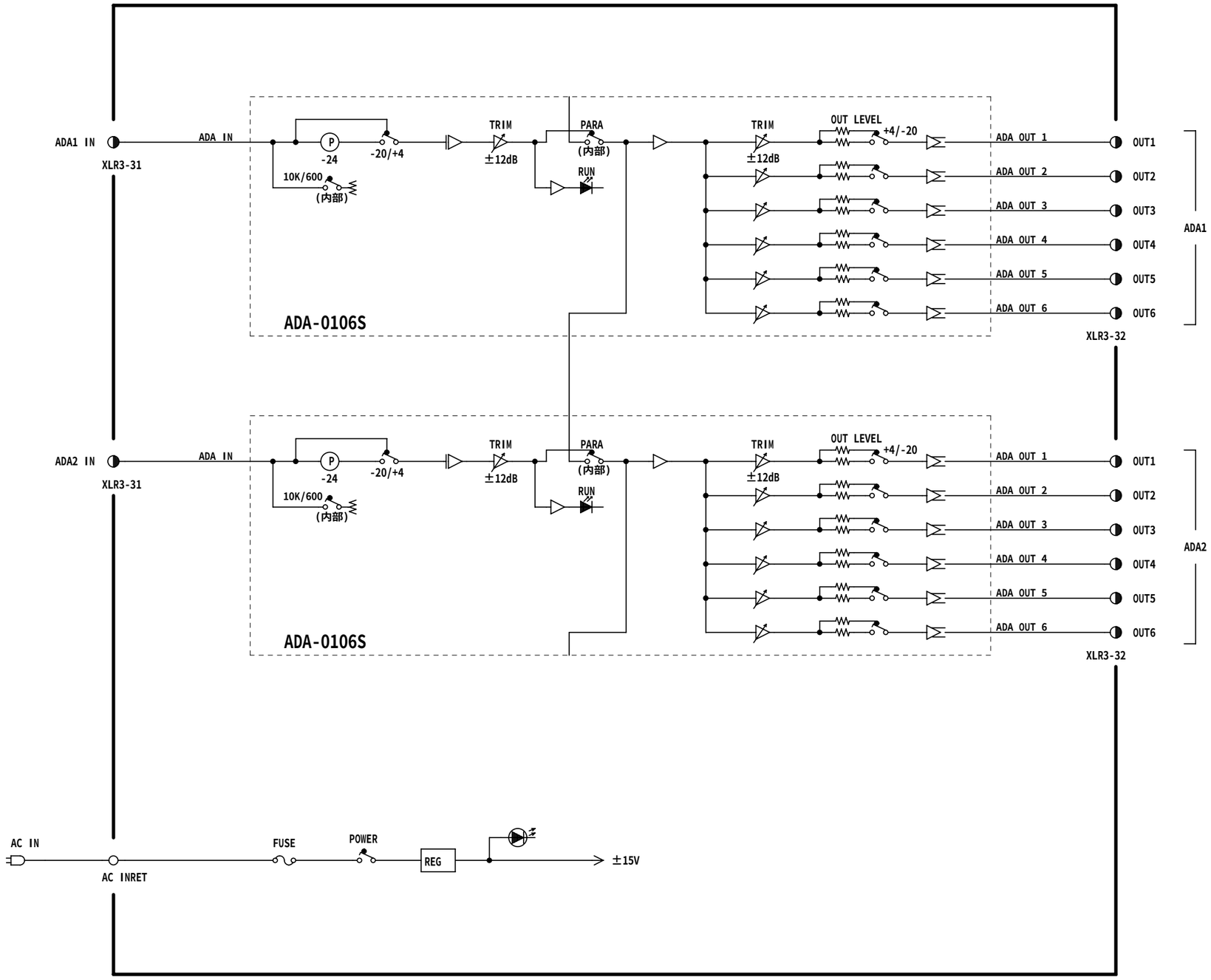

ADA-0106S 2式　実装

Crescent Co., Ltd.	Scale /	Designed by . .	Drawn by K.Y '08 / 10 / 15	TITLE AUDIO SYSTEM FRAME ASF-2	SUB TITLE 系統図