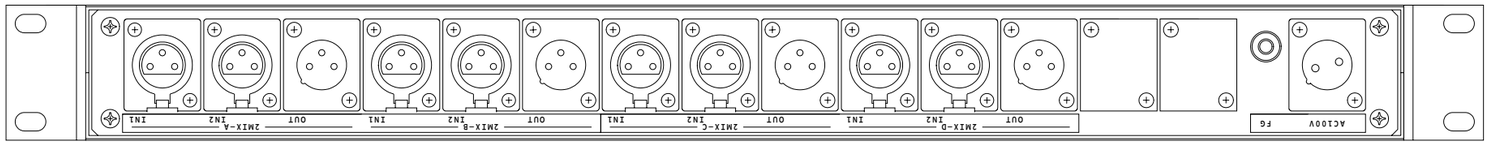

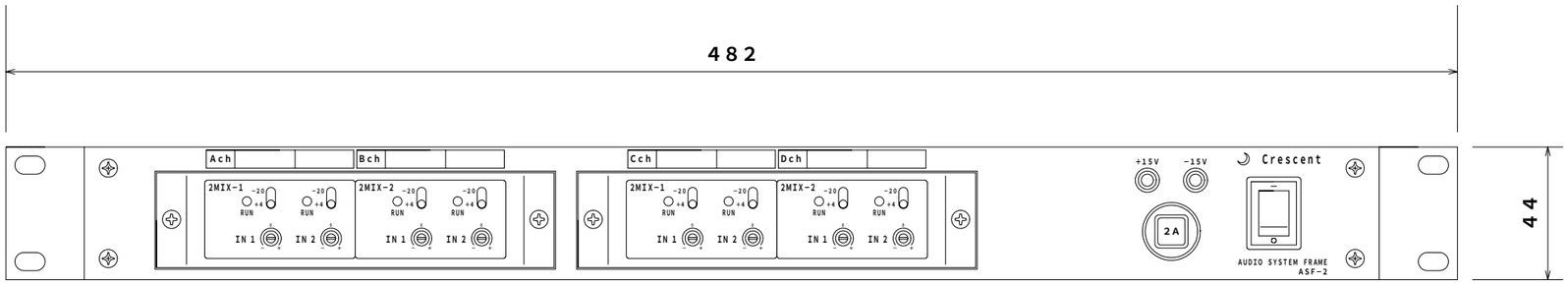

2MIX UNIT 2式 実装

Crescent Co.,Ltd.	Scale 1/2	Designed by 。 。	Drawn by K.Y '06 / 08 / 23	TITLE AUDIO SYSTEM FRAME ASF-2	SUB TITLE 外観図	Drawing No. ; Whole ;

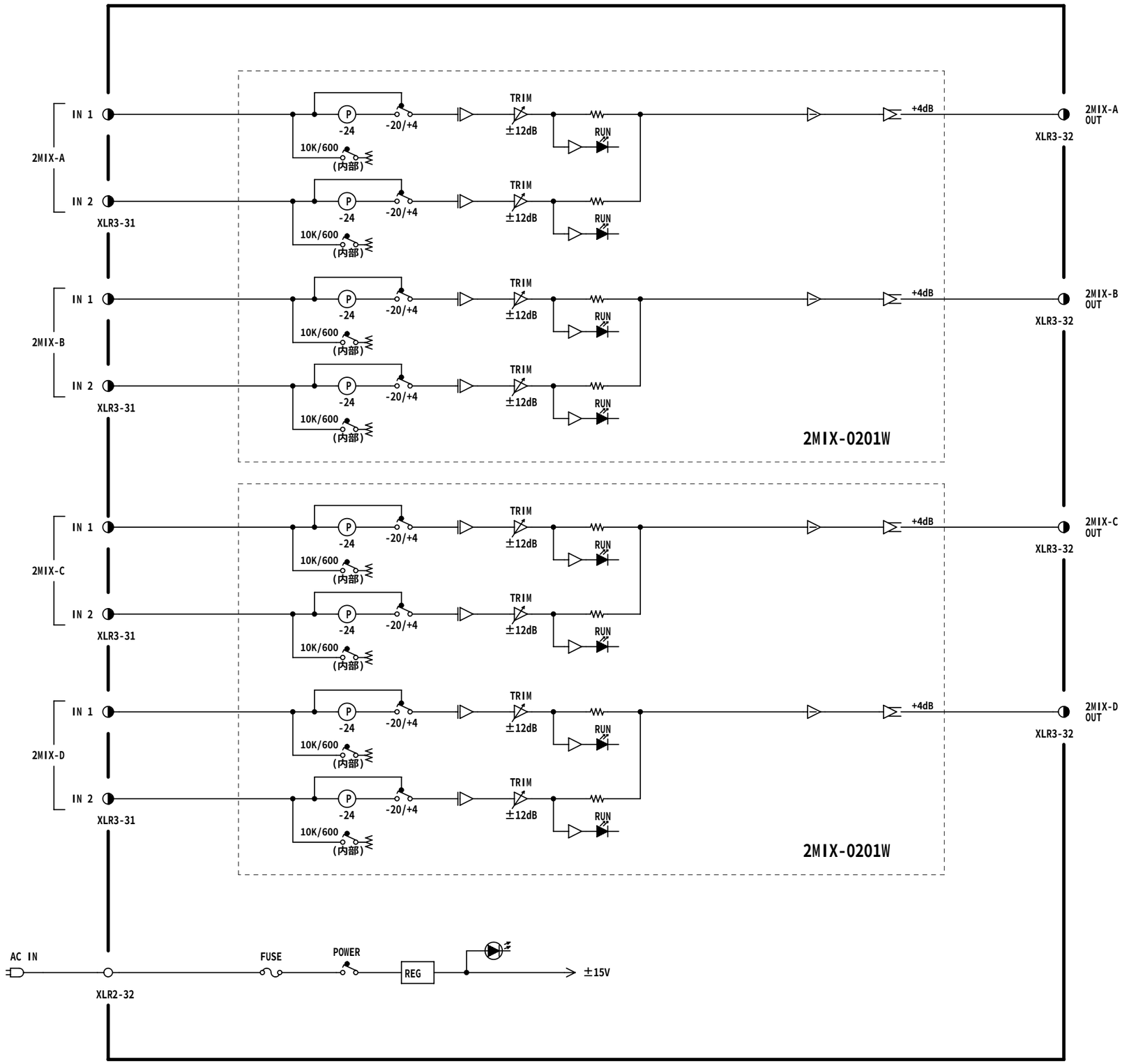

Crescent Co., Ltd.	Scale /	Designed by . .	Drawn by K.Y '06 / 08 / 23	TITLE AUDIO SYSTEM FRAME ASF-2	SUB TITLE 系統図	